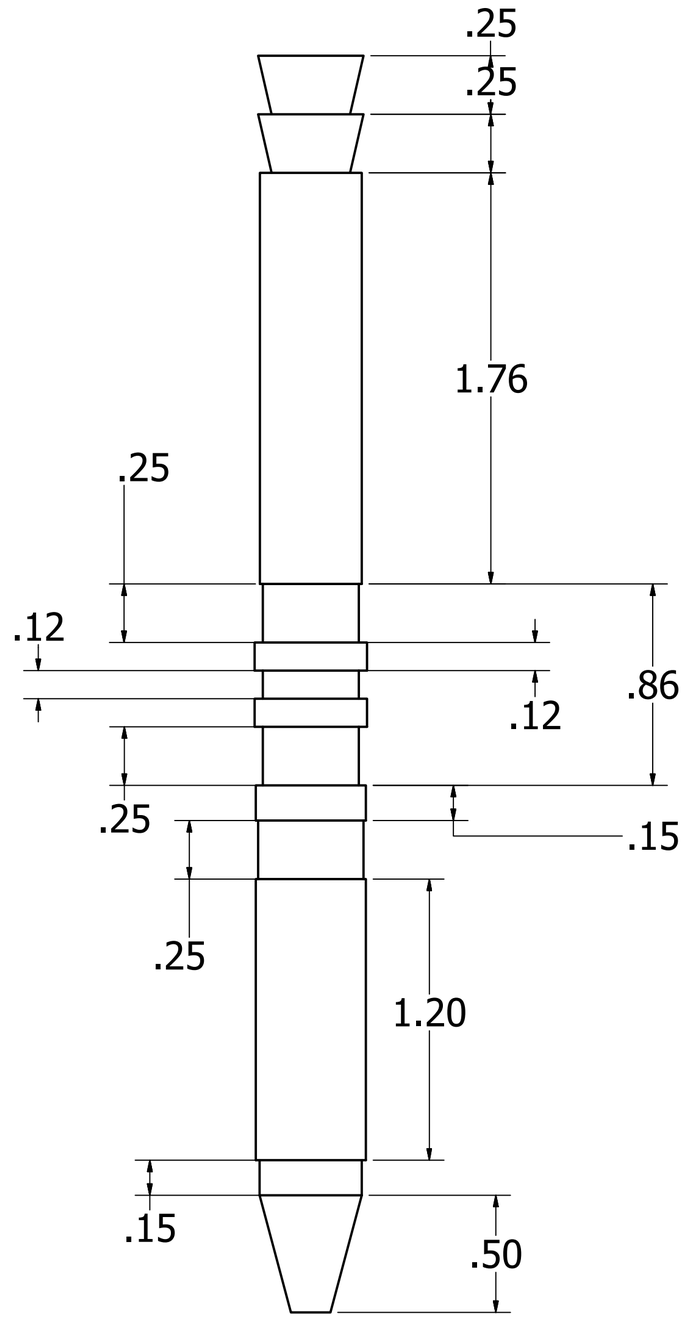

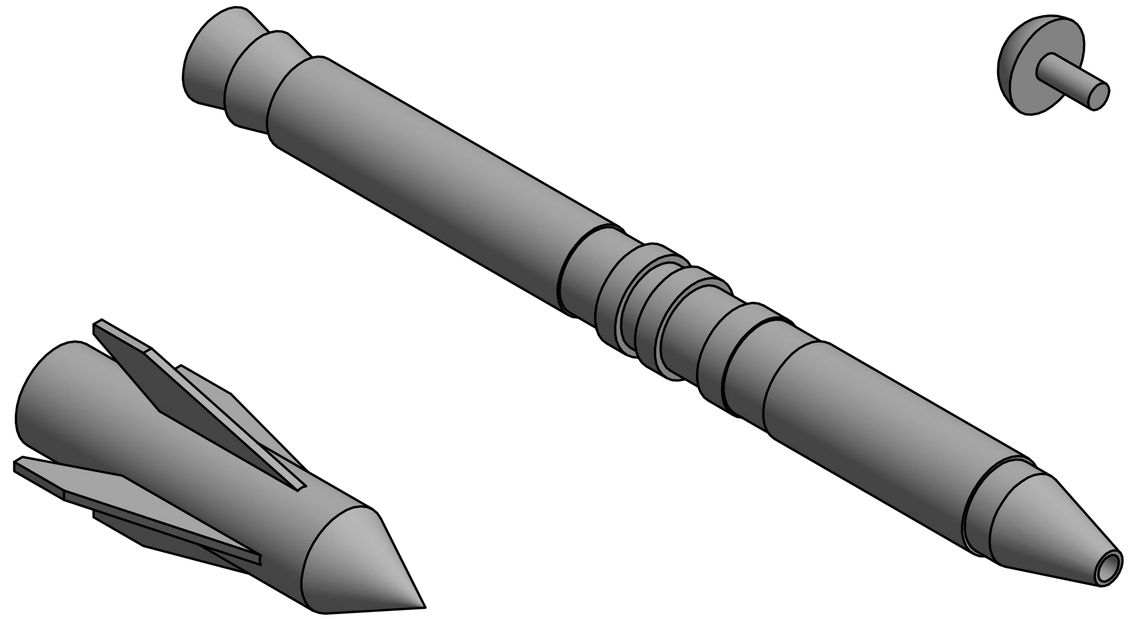

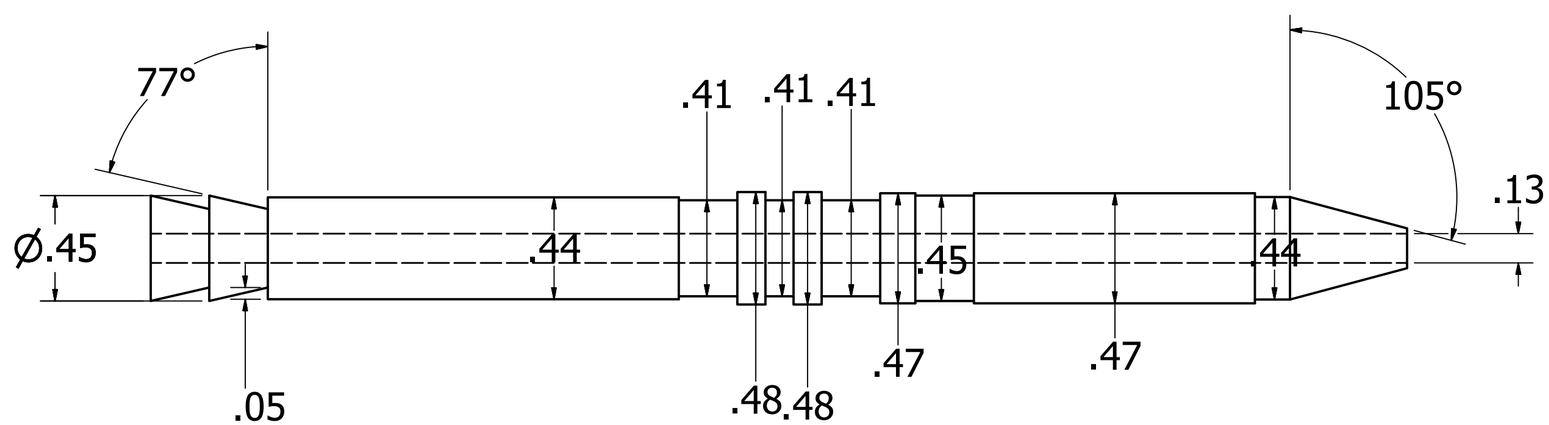

DRAWN bidhen	2017-11-22	
CHECKED		TITLE
QA		
MFG		
APPROVED		SIZE C / DWG NO Pen / REV
		SCALE / SHEET 1 OF 1